FH330_Frame



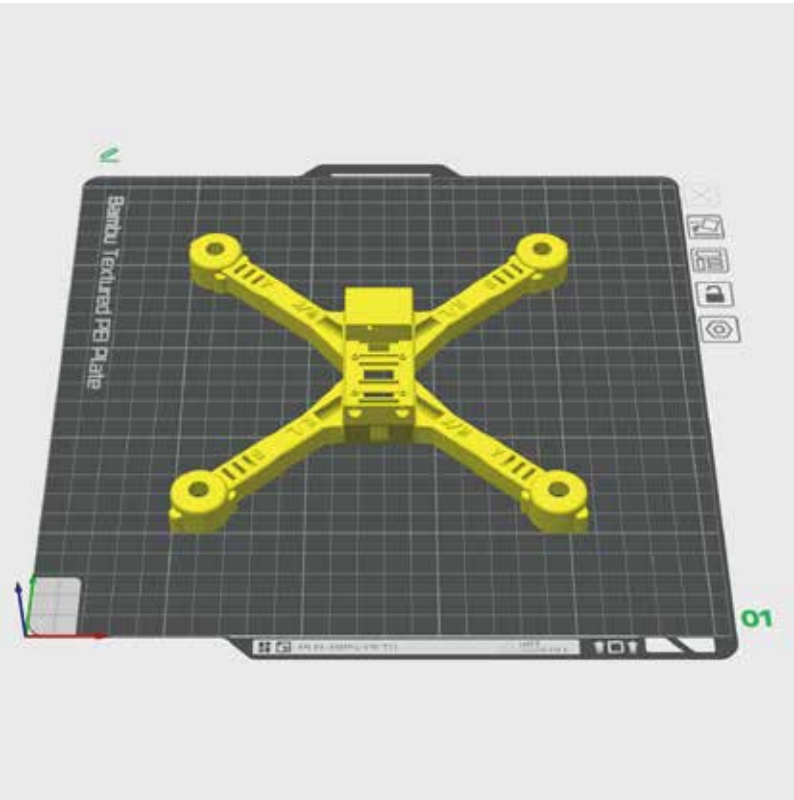

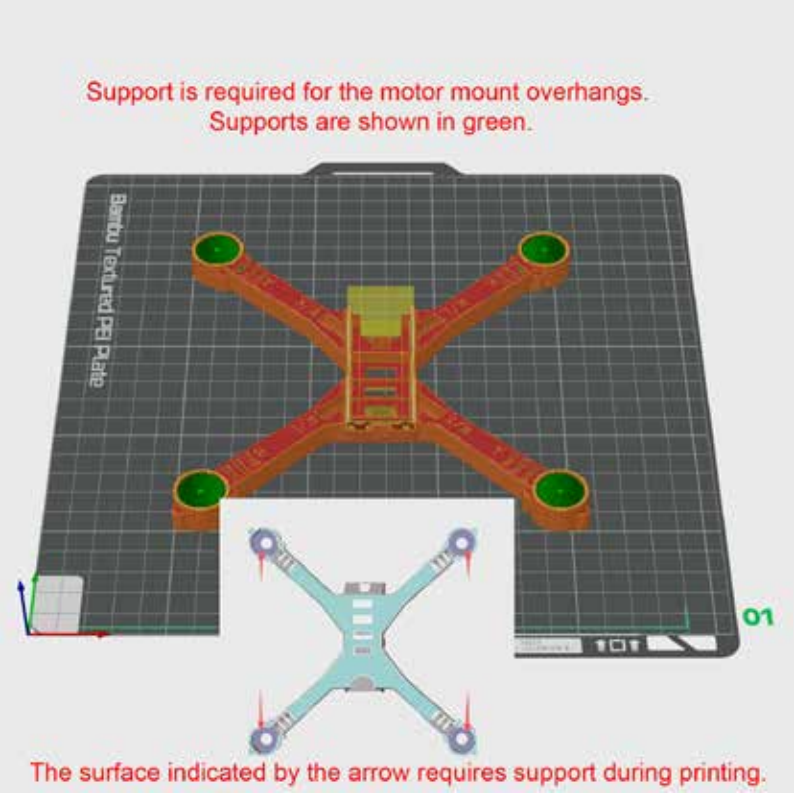

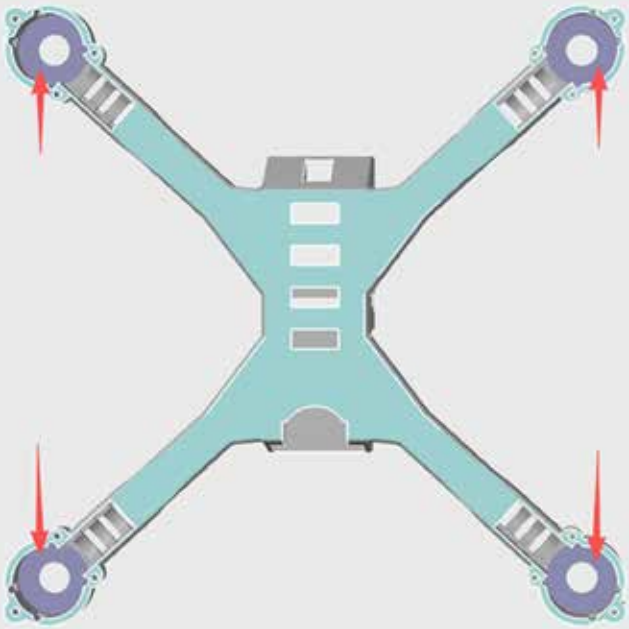

Support is required for the motor mount overhangs.
Supports are shown in green.
The surface indicated by the arrow requires support during printing.

FH330_Frame

Nozzle: 0.4 mm
Filament: PLA Basic
Layer Height: 0.16 mm

Make sure to enable supports in your print settings.

Printer



Bambu Lab P1S



Texture...

Sync info

Nozzle

Diameter 0.4 Flow Standard

Project Filaments

Filament

1 PLA Basic

Process Global Objects Advanced

* 0.16mm High Quality @BBL X1C

Quality Strength Speed Support Others

Layer height

Layer height	0.16 mm
Initial layer height	0.2 mm
Mixed color sublayer	☐

Line width

Default	0.42 mm
Initial layer	0.5 mm
Initial layer infill	0.5 mm
Outer wall	0.42 mm
Inner wall	0.45 mm
Top surface	0.42 mm
Sparse infill	0.45 mm
Internal solid infill	0.42 mm
Support	0.42 mm

Seam

Seam position	Aligned
Seam placement away from overhangs(experimental)	☐
Smart scarf seam application	☑
Scarf application angle threshold	155 °
Scarf around entire wall	☐
Scarf steps	10
Scarf joint for inner walls	☑
Override filament scarf seam setting	☐
Role-based wipe speed	☑

Precision

Slice gap closing radius	0.049 mm
Resolution	0.012 mm
Arc fitting	☑
X-Y hole compensation	0 mm
X-Y contour compensation	0 mm
Auto circle contour-hole compensation	☐
Elephant foot compensation	0.15 mm
Precise Z height	☐

Ironing

Ironing Type	No ironing

Wall generator

Wall generator	Classic

Advanced

Order of walls	inner/outer
Print infill first	☐
Bridge flow	1
Thick bridges	☐
Bridge counterbore holes	None
Only one wall on top surfaces	Top surfaces
Only one wall on first layer	☐
Smooth speed discontinuity area	☑
Smooth coefficient	150
Avoid crossing wall	☐

FH330_Frame

* 0.16mm High Quality @BBL X1C

Quality | **Strength** | Speed | Support | Others

Walls

Wall loops	2
Alternate extra wall	☐
Embedding the wall into the infill	☐
Detect thin wall	☐

Top/bottom shells

Top surface pattern	Monotonic...
Top surface density	100 %
Top shell layers	6
Top shell thickness	1 mm
Top paint penetration layers	6
Bottom surface pattern	Monotonic
Bottom surface density	100 %
Bottom shell layers	4
Bottom shell thickness	0 mm
Bottom paint penetration layers	4
Internal solid infill pattern	Rectilinear

Sparse infill

Sparse infill density	15 %
Fill multiline	1
Sparse infill pattern	Gyroid
Length of sparse infill anchor	400% mm or %
Maximum length of sparse infill anchor	20 mm or %

Advanced

Infill/Wall overlap	15 %
Infill direction	45 °
Bridge direction	0 °
Minimum sparse infill threshold	15 mm²
Infill combination	☐
Detect narrow internal solid infill	☑
Sub-top surface pattern	Monotonic
Ensure vertical shell thickness	Enabled
Detect floating vertical shells	☑
Sparse infill filament	Default
Solid infill filament	Default
Walls filament	Default

* 0.16mm High Quality @BBL X1C

Quality | Strength | **Speed** | Support | Others

Initial layer speed

Initial layer	50 mm/s
Initial layer infill	105 mm/s

Other layers speed

Outer wall	60 mm/s
Inner wall	150 mm/s
Small perimeters	50% mm/s or %
Small perimeter threshold	0 mm
Sparse infill	200 mm/s
Internal solid infill	200 mm/s
Vertical shell speed	80% mm/s or %
Top surface	150 mm/s
Slow down for overhangs	☑
Overhang speed	60 mm/s 10% 30 mm/s 25% 10 mm/s 50% 10 mm/s 75% 10 mm/s 100%
Slow down by height	☐
Bridge	50 mm/s
Gap infill	250 mm/s
Support	150 mm/s
Support interface	80 mm/s

Travel speed

Travel	500 mm/s

Acceleration

Normal printing	4000 mm/s²
Travel	10000 mm/s²
Initial layer travel	6000 mm/s²
Initial layer	500 mm/s²
Outer wall	2000 mm/s²
Inner wall	0 mm/s²
Top surface	2000 mm/s²
Sparse infill	100% mm/s² or %

FH330_Frame

* 0.16mm High Quality @BBL X1C

Quality | Strength | Speed | **Support** | Others

Support

Enable support	☑
Type	normal(man...
Style	Default
Threshold angle	25 °
On build plate only	☐
Remove small overhangs	☑

Raft

Raft layers	0 layers

Filament for Supports

Support/raft base	Default
Support/raft interface	Default

Advanced

Initial layer density	90 %
Initial layer expansion	-1 mm
Support wall loops	-1
Top Z distance	0.16 mm
Bottom Z distance	0.16 mm
Base pattern	Default
Base pattern spacing	2.5 mm
Pattern angle	0 °
Top interface layers	2 layers
Normal Support expansion	0 mm
Support/object xy distance	0.35 mm
Z overrides X/Y	☐
Support/object first layer gap	0.2 mm
Don't support bridges	☐
Independent support layer height	☑

* 0.16mm High Quality @BBL X1C

Quality | Strength | Speed | Support | **Others**

Bed adhesion

Skirt loops	0
Skirt height	1 layers
Brim type	Auto
Brim width	5 mm
Brim-object gap	0.1 mm

Prime tower

Enable	☑
Skip points	☑
Internal ribs	☐
Width	35 mm
Max speed	90 mm/s
Brim width	3 mm
Infill gap	150 %
Rib wall	☑
Extra rib length	0 mm
Rib width	8 mm
Fillet wall	☑
Flat ironing	☐
Line ironing	☑
Ironing speed	10 mm/s
Side scrape after tool change	☐

Purge options

Purge into objects' infill	☐
Purge into objects' support	☑

Special mode

Slicing Mode	Regular
Print sequence	By layer
Spiral vase	☐
Timelapse	Instant
Fuzzy Skin	None(allow ...
Fuzzy skin generator mode	Displacement
Fuzzy skin noise type	Classic
Fuzzy skin point distance	0.8 mm
Fuzzy skin thickness	0.3 mm
Apply fuzzy skin to first layer	☐

FH330_Landing_Foot



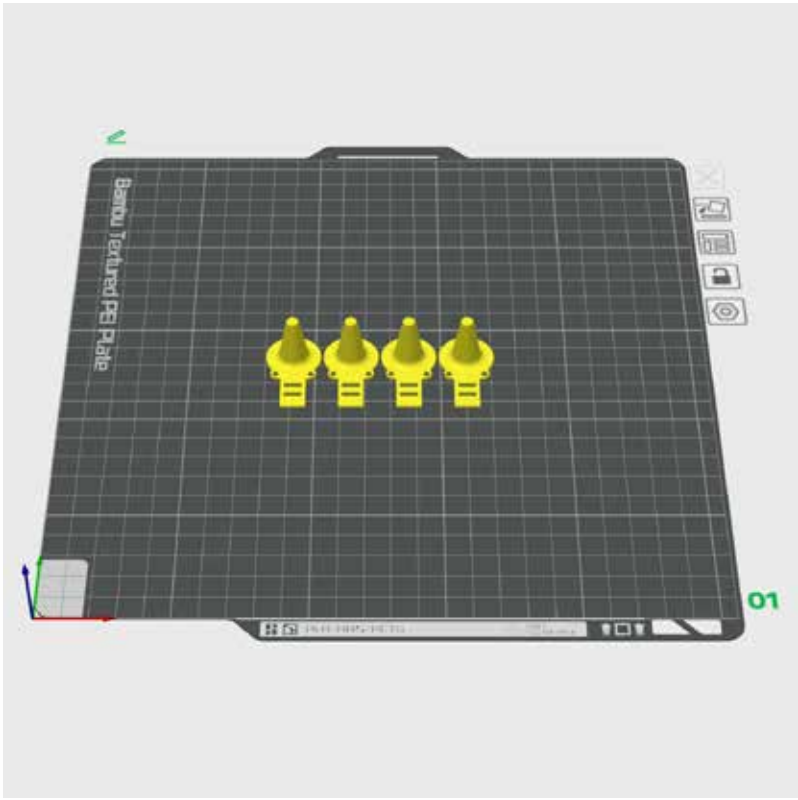

FH330_Landing_Foot

Nozzle: 0.4 mm
Filament: PLA Basic
Layer Height: 0.16 mm

Printer



Bambu Lab P1S



Texture...

Sync info

Nozzle

Diameter 0.4 Flow Standard

Project Filaments

Filament

1 PLA Basic

Process Global Objects Advanced

0.16mm High Quality @BBL X1C

Quality Strength Speed Support Others

Layer height

Layer height	0.16 mm
Initial layer height	0.2 mm
Mixed color sublayer	☐

Line width

Default	0.42 mm
Initial layer	0.5 mm
Initial layer infill	0.5 mm
Outer wall	0.42 mm
Inner wall	0.45 mm
Top surface	0.42 mm
Sparse infill	0.45 mm
Internal solid infill	0.42 mm
Support	0.42 mm

Seam

Seam position	Aligned
Seam placement away from overhangs(experimental)	☐
Smart scarf seam application	☑
Scarf application angle threshold	155 °
Scarf around entire wall	☐
Scarf steps	10
Scarf joint for inner walls	☑
Override filament scarf seam setting	☐
Role-based wipe speed	☑

Precision

Slice gap closing radius	0.049 mm
Resolution	0.012 mm
Arc fitting	☑
X-Y hole compensation	0 mm
X-Y contour compensation	0 mm
Auto circle contour-hole compensation	☐
Elephant foot compensation	0.15 mm
Precise Z height	☐

Ironing

Ironing Type	No ironing

Wall generator

Wall generator	Classic

Advanced

Order of walls	inner/outer
Print infill first	☐
Bridge flow	1
Thick bridges	☐
Bridge counterbore holes	None
Only one wall on top surfaces	Top surfaces
Only one wall on first layer	☐
Smooth speed discontinuity area	☑
Smooth coefficient	150
Avoid crossing wall	☐

FH330_Landing_Foot

0.16mm High Quality @BBL X1C

Quality | **Strength** | Speed | Support | Others

Walls

Wall loops	2
Alternate extra wall	☐
Embedding the wall into the infill	☐
Detect thin wall	☐

Top/bottom shells

Top surface pattern	Monotonic...
Top surface density	100 %
Top shell layers	6
Top shell thickness	1 mm
Top paint penetration layers	6
Bottom surface pattern	Monotonic
Bottom surface density	100 %
Bottom shell layers	4
Bottom shell thickness	0 mm
Bottom paint penetration layers	4
Internal solid infill pattern	Rectilinear

Sparse infill

Sparse infill density	15 %
Fill multiline	1
Sparse infill pattern	Gyroid
Length of sparse infill anchor	400% mm or %
Maximum length of sparse infill anchor	20 mm or %

Advanced

Infill/Wall overlap	15 %
Infill direction	45 °
Bridge direction	0 °
Minimum sparse infill threshold	15 mm²
Infill combination	☐
Detect narrow internal solid infill	☑
Sub-top surface pattern	Monotonic
Ensure vertical shell thickness	Enabled
Detect floating vertical shells	☑
Sparse infill filament	Default
Solid infill filament	Default
Walls filament	Default

0.16mm High Quality @BBL X1C

Quality | Strength | **Speed** | Support | Others

Initial layer speed

Initial layer	50 mm/s
Initial layer infill	105 mm/s

Other layers speed

Outer wall	60 mm/s
Inner wall	150 mm/s
Small perimeters	50% mm/s or %
Small perimeter threshold	0 mm
Sparse infill	200 mm/s
Internal solid infill	200 mm/s
Vertical shell speed	80% mm/s or %
Top surface	150 mm/s
Slow down for overhangs	☑
Overhang speed	60 mm/s 10%
	30 mm/s 25%
	10 mm/s 50%
	10 mm/s 75%
	10 mm/s 100%
Slow down by height	☐
Bridge	50 mm/s
Gap infill	250 mm/s
Support	150 mm/s
Support interface	80 mm/s

Travel speed

Travel	500 mm/s

Acceleration

Normal printing	4000 mm/s²
Travel	10000 mm/s²
Initial layer travel	6000 mm/s²
Initial layer	500 mm/s²
Outer wall	2000 mm/s²
Inner wall	0 mm/s²
Top surface	2000 mm/s²
Sparse infill	100% mm/s² or %

FH330_Landing_Foot

0.16mm High Quality @BBL X1C

Quality | Strength | Speed | **Support** | Others

Support

Enable support	☐
Type	tree(auto)
Style	Default
Threshold angle	25 °
On build plate only	☐
Remove small overhangs	☑

Raft

Raft layers	0 layers

Filament for Supports

Support/raft base	Default
Support/raft interface	Default

Advanced

Initial layer density	90 %
Initial layer expansion	-1 mm
Support wall loops	-1
Top Z distance	0.16 mm
Bottom Z distance	0.16 mm
Base pattern	Default
Base pattern spacing	2.5 mm
Pattern angle	0 °
Top interface layers	2 layers
Bottom interface layers	2 layers
Interface pattern	Default
Top interface spacing	0.5 mm
Normal Support expansion	0 mm
Support/object xy distance	0.35 mm
Z overrides X/Y	☐
Support/object first layer gap	0.2 mm
Don't support bridges	☐
Independent support layer height	☑

0.16mm High Quality @BBL X1C

Quality | Strength | Speed | Support | **Others**

Bed adhesion

Skirt loops	0
Skirt height	1 layers
Brim type	Auto
Brim width	5 mm
Brim-object gap	0.1 mm

Prime tower

Enable	☑
Skip points	☑
Internal ribs	☐
Width	35 mm
Max speed	90 mm/s
Brim width	3 mm
Infill gap	150 %
Rib wall	☑
Extra rib length	0 mm
Rib width	8 mm
Fillet wall	☑
Flat ironing	☐
Line ironing	☑
Ironing speed	10 mm/s
Side scrape after tool change	☐

Purge options

Purge into objects' infill	☐
Purge into objects' support	☑

Special mode

Slicing Mode	Regular
Print sequence	By layer
Spiral vase	☐
Timelapse	Instant
Fuzzy Skin	None(allow ...
Fuzzy skin generator mode	Displacement
Fuzzy skin noise type	Classic
Fuzzy skin point distance	0.8 mm
Fuzzy skin thickness	0.3 mm
Apply fuzzy skin to first layer	☐

FH330_Controller_Housing



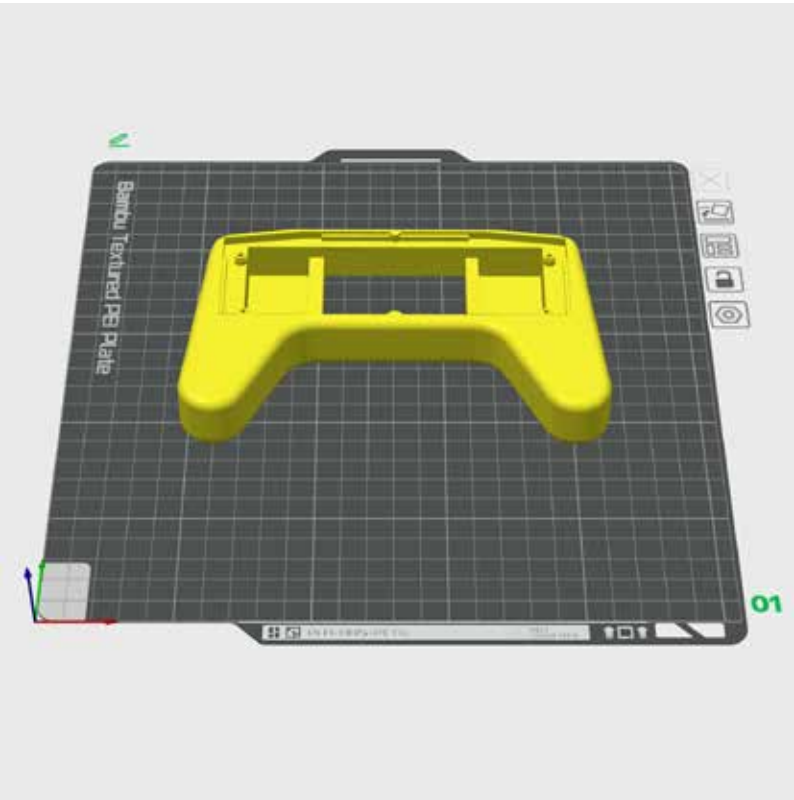

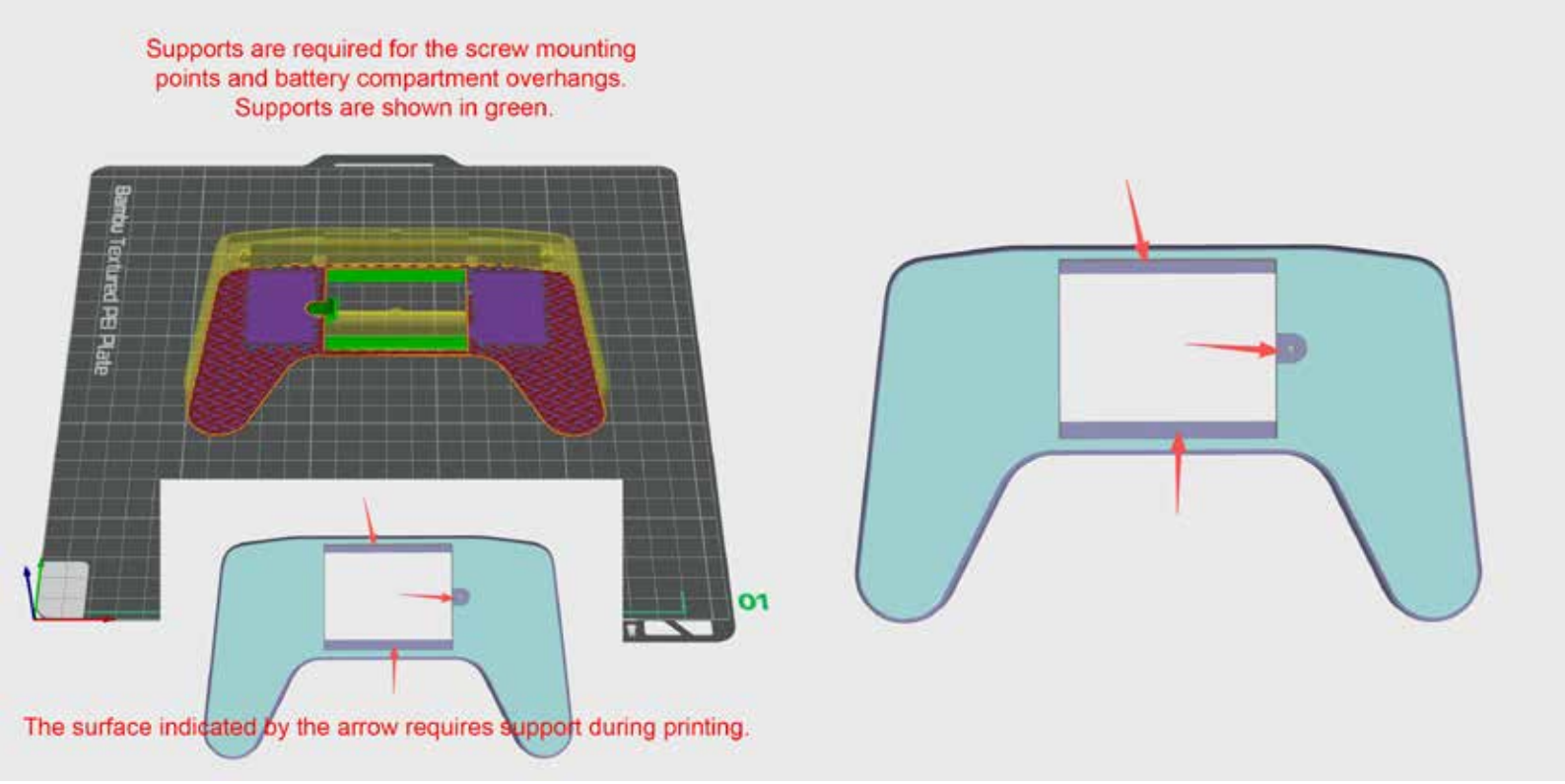

Support is required for the motor mount overhangs.
Supports are shown in green.
The surface indicated by the arrow requires support during printing.

FH330_Controller_Housing

Nozzle: 0.4 mm
Filament: PLA Basic
Layer Height: 0.16 mm

Make sure to enable supports in your print settings.

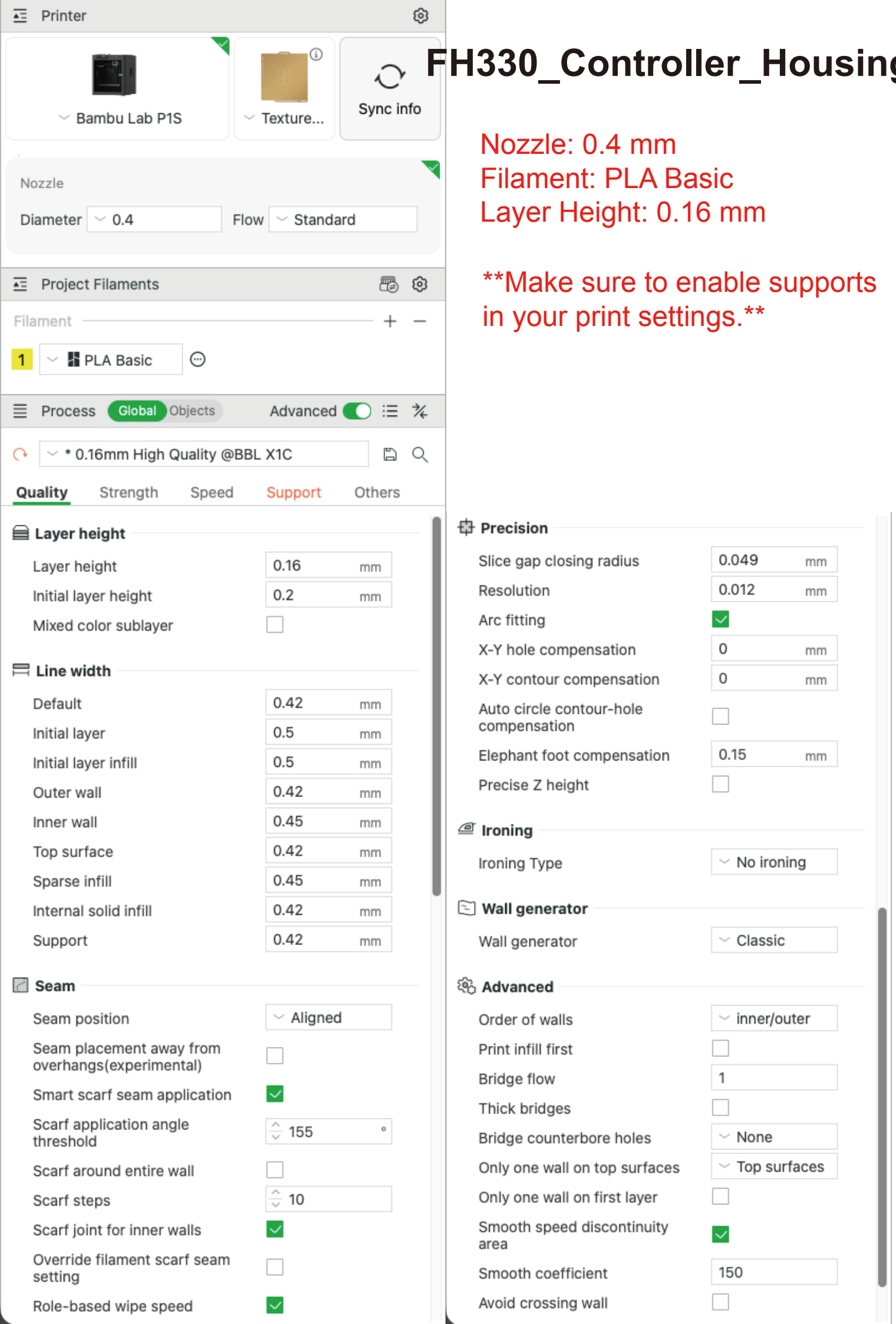

FH330_Controller_Housing

* 0.16mm High Quality @BBL X1C

Quality | **Strength** | Speed | Support | Others

Walls

Wall loops	2
Alternate extra wall	☐
Embedding the wall into the infill	☐
Detect thin wall	☐

Top/bottom shells

Top surface pattern	Monotonic...
Top surface density	100 %
Top shell layers	6
Top shell thickness	1 mm
Top paint penetration layers	6
Bottom surface pattern	Monotonic
Bottom surface density	100 %
Bottom shell layers	4
Bottom shell thickness	0 mm
Bottom paint penetration layers	4
Internal solid infill pattern	Rectilinear

Sparse infill

Sparse infill density	15 %
Fill multiline	1
Sparse infill pattern	Gyroid
Length of sparse infill anchor	400% mm or %
Maximum length of sparse infill anchor	20 mm or %

Advanced

Infill/Wall overlap	15 %
Infill direction	45 °
Bridge direction	0 °
Minimum sparse infill threshold	15 mm²
Infill combination	☐
Detect narrow internal solid infill	☑
Sub-top surface pattern	Monotonic
Ensure vertical shell thickness	Enabled
Detect floating vertical shells	☑
Sparse infill filament	Default
Solid infill filament	Default
Walls filament	Default

* 0.16mm High Quality @BBL X1C

Quality | Strength | **Speed** | Support | Others

Initial layer speed

Initial layer	50 mm/s
Initial layer infill	105 mm/s

Other layers speed

Outer wall	60 mm/s
Inner wall	150 mm/s
Small perimeters	50% mm/s or %
Small perimeter threshold	0 mm
Sparse infill	200 mm/s
Internal solid infill	200 mm/s
Vertical shell speed	80% mm/s or %
Top surface	150 mm/s
Slow down for overhangs	☑
Overhang speed	60 mm/s 10%
	30 mm/s 25%
	10 mm/s 50%
	10 mm/s 75%
	10 mm/s 100%
Slow down by height	☐
Bridge	50 mm/s
Gap infill	250 mm/s
Support	150 mm/s
Support interface	80 mm/s

Travel speed

Travel	500 mm/s

Acceleration

Normal printing	4000 mm/s²
Travel	10000 mm/s²
Initial layer travel	6000 mm/s²
Initial layer	500 mm/s²
Outer wall	2000 mm/s²
Inner wall	0 mm/s²
Top surface	2000 mm/s²
Sparse infill	100% mm/s² or %

FH330_Controller_Housing

* 0.16mm High Quality @BBL X1C

Quality | Strength | Speed | **Support** | Others

Support

Enable support	☑
Type	normal(man...
Style	Default
Threshold angle	25 °
On build plate only	☐
Remove small overhangs	☑

Raft

Raft layers	0 layers

Filament for Supports

Support/raft base	Default
Support/raft interface	Default

Advanced

Initial layer density	90 %
Initial layer expansion	-1 mm
Support wall loops	-1
Top Z distance	0.16 mm
Bottom Z distance	0.16 mm
Base pattern	Default
Base pattern spacing	2.5 mm
Pattern angle	0 °
Top interface layers	2 layers
Bottom interface layers	2 layers
Interface pattern	Default
Top interface spacing	0.5 mm
Normal Support expansion	0 mm
Support/object xy distance	0.35 mm
Z overrides X/Y	☐
Support/object first layer gap	0.2 mm
Don't support bridges	☐
Independent support layer height	☑

* 0.16mm High Quality @BBL X1C

Quality | Strength | Speed | Support | **Others**

Bed adhesion

Skirt loops	0
Skirt height	1 layers
Brim type	Auto
Brim width	5 mm
Brim-object gap	0.1 mm

Prime tower

Enable	☑
Skip points	☑
Internal ribs	☐
Width	35 mm
Max speed	90 mm/s
Brim width	3 mm
Infill gap	150 %
Rib wall	☑
Extra rib length	0 mm
Rib width	8 mm
Fillet wall	☑
Flat ironing	☐
Line ironing	☑
Ironing speed	10 mm/s
Side scrape after tool change	☐

Purge options

Purge into objects' infill	☐
Purge into objects' support	☑

Special mode

Slicing Mode	Regular
Print sequence	By layer
Spiral vase	☐
Timelapse	Instant
Fuzzy Skin	None(allow ...
Fuzzy skin generator mode	Displacement
Fuzzy skin noise type	Classic
Fuzzy skin point distance	0.8 mm
Fuzzy skin thickness	0.3 mm
Apply fuzzy skin to first layer	☐

FH330_Stick_Cap



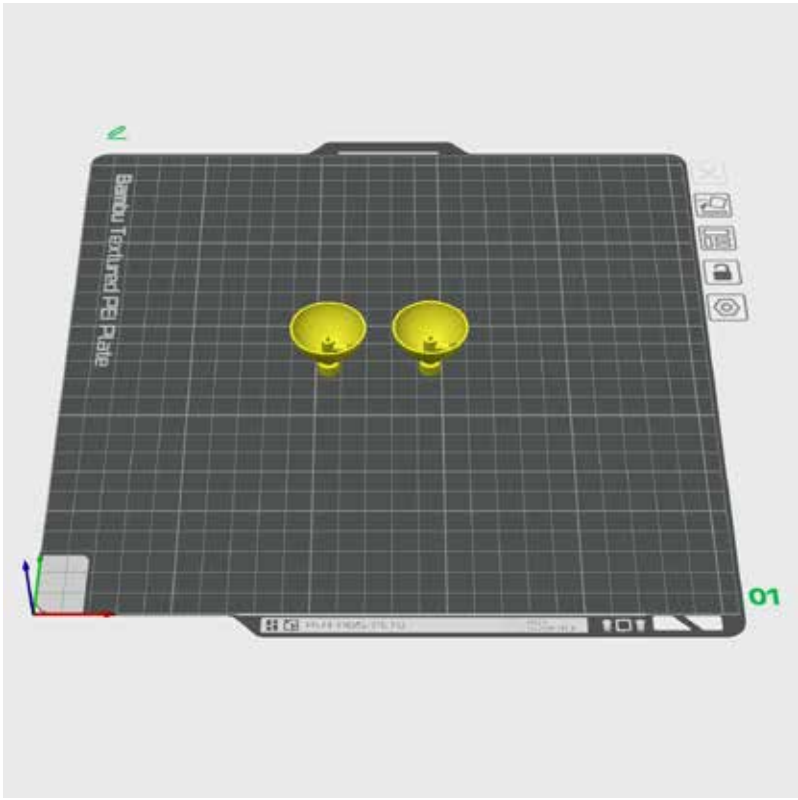

FH330_Stick_Cap

Nozzle: 0.4 mm
Filament: PLA Basic
Layer Height: 0.16 mm

Printer

Bambu Lab P1S | Texture... | Sync info

Nozzle

Diameter 0.4 | Flow Standard

Project Filaments

Filament

1 PLA Basic

Process Global Objects Advanced

0.16mm High Quality @BBL X1C

Quality | Strength | Speed | Support | Others

Layer height

Layer height	0.16	mm
Initial layer height	0.2	mm
Mixed color sublayer	☐	

Line width

Default	0.42	mm
Initial layer	0.5	mm
Initial layer infill	0.5	mm
Outer wall	0.42	mm
Inner wall	0.45	mm
Top surface	0.42	mm
Sparse infill	0.45	mm
Internal solid infill	0.42	mm
Support	0.42	mm

Seam

Seam position	Aligned
Seam placement away from overhangs(experimental)	☐
Smart scarf seam application	☑
Scarf application angle threshold	155 °
Scarf around entire wall	☐
Scarf steps	10
Scarf joint for inner walls	☑
Override filament scarf seam setting	☐
Role-based wipe speed	☑

Precision

Slice gap closing radius	0.049	mm
Resolution	0.012	mm
Arc fitting	☑	
X-Y hole compensation	0	mm
X-Y contour compensation	0	mm
Auto circle contour-hole compensation	☐	
Elephant foot compensation	0.15	mm
Precise Z height	☐	

Ironing

Ironing Type	No ironing

Wall generator

Wall generator	Classic

Advanced

Order of walls	inner/outer
Print infill first	☐
Bridge flow	1
Thick bridges	☐
Bridge counterbore holes	None
Only one wall on top surfaces	Top surfaces
Only one wall on first layer	☐
Smooth speed discontinuity area	☑
Smooth coefficient	150
Avoid crossing wall	☐

FH330_Stick_Cap

0.16mm High Quality @BBL X1C

Quality | **Strength** | Speed | Support | Others

Walls

Wall loops	2
Alternate extra wall	☐
Embedding the wall into the infill	☐
Detect thin wall	☐

Top/bottom shells

Top surface pattern	Monotonic...
Top surface density	100 %
Top shell layers	6
Top shell thickness	1 mm
Top paint penetration layers	6
Bottom surface pattern	Monotonic
Bottom surface density	100 %
Bottom shell layers	4
Bottom shell thickness	0 mm
Bottom paint penetration layers	4
Internal solid infill pattern	Rectilinear

Sparse infill

Sparse infill density	15 %
Fill multiline	1
Sparse infill pattern	Gyroid
Length of sparse infill anchor	400% mm or %
Maximum length of sparse infill anchor	20 mm or %

Advanced

Infill/Wall overlap	15 %
Infill direction	45 °
Bridge direction	0 °
Minimum sparse infill threshold	15 mm²
Infill combination	☐
Detect narrow internal solid infill	☑
Sub-top surface pattern	Monotonic
Ensure vertical shell thickness	Enabled
Detect floating vertical shells	☑
Sparse infill filament	Default
Solid infill filament	Default
Walls filament	Default

0.16mm High Quality @BBL X1C

Quality | Strength | **Speed** | Support | Others

Initial layer speed

Initial layer	50 mm/s
Initial layer infill	105 mm/s

Other layers speed

Outer wall	60 mm/s
Inner wall	150 mm/s
Small perimeters	50% mm/s or %
Small perimeter threshold	0 mm
Sparse infill	200 mm/s
Internal solid infill	200 mm/s
Vertical shell speed	80% mm/s or %
Top surface	150 mm/s
Slow down for overhangs	☑
Overhang speed	60 mm/s 10%
	30 mm/s 25%
	10 mm/s 50%
	10 mm/s 75%
	10 mm/s 100%
Slow down by height	☐
Bridge	50 mm/s
Gap infill	250 mm/s
Support	150 mm/s
Support interface	80 mm/s

Travel speed

Travel	500 mm/s

Acceleration

Normal printing	4000 mm/s²
Travel	10000 mm/s²
Initial layer travel	6000 mm/s²
Initial layer	500 mm/s²
Outer wall	2000 mm/s²
Inner wall	0 mm/s²
Top surface	2000 mm/s²
Sparse infill	100% mm/s² or %

FH330_Stick_Cap

0.16mm High Quality @BBL X1C

Quality | Strength | Speed | **Support** | Others

Support

Enable support	☐
Type	tree(auto)
Style	Default
Threshold angle	25 °
On build plate only	☐
Remove small overhangs	☑

Raft

Raft layers	0 layers

Filament for Supports

Support/raft base	Default
Support/raft interface	Default

Advanced

Initial layer density	90 %
Initial layer expansion	-1 mm
Support wall loops	-1
Top Z distance	0.16 mm
Bottom Z distance	0.16 mm
Base pattern	Default
Base pattern spacing	2.5 mm
Pattern angle	0 °
Top interface layers	2 layers
Bottom interface layers	2 layers
Interface pattern	Default
Top interface spacing	0.5 mm
Normal Support expansion	0 mm
Support/object xy distance	0.35 mm
Z overrides X/Y	☐
Support/object first layer gap	0.2 mm
Don't support bridges	☐
Independent support layer height	☑

0.16mm High Quality @BBL X1C

Quality | Strength | Speed | Support | **Others**

Bed adhesion

Skirt loops	0
Skirt height	1 layers
Brim type	Auto
Brim width	5 mm
Brim-object gap	0.1 mm

Prime tower

Enable	☑
Skip points	☑
Internal ribs	☐
Width	35 mm
Max speed	90 mm/s
Brim width	3 mm
Infill gap	150 %
Rib wall	☑
Extra rib length	0 mm
Rib width	8 mm
Fillet wall	☑
Flat ironing	☐
Line ironing	☑
Ironing speed	10 mm/s
Side scrape after tool change	☐

Purge options

Purge into objects' infill	☐
Purge into objects' support	☑

Special mode

Slicing Mode	Regular
Print sequence	By layer
Spiral vase	☐
Timelapse	Instant
Fuzzy Skin	None(allow ...
Fuzzy skin generator mode	Displacement
Fuzzy skin noise type	Classic
Fuzzy skin point distance	0.8 mm
Fuzzy skin thickness	0.3 mm
Apply fuzzy skin to first layer	☐

FH330_Controller_Cover



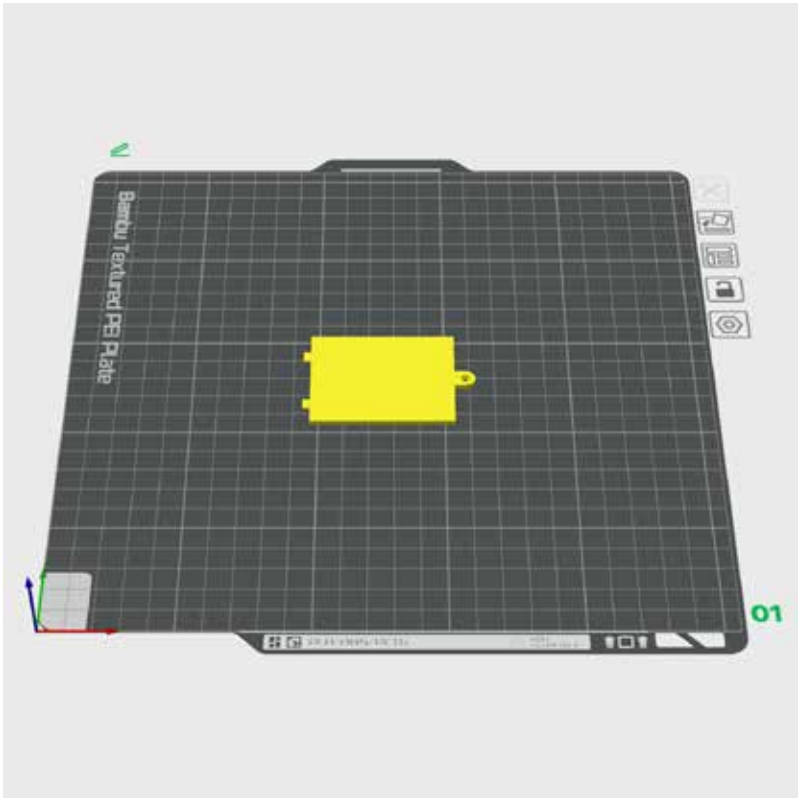

FH330_Controller_Cover

Nozzle: 0.4 mm
Filament: PLA Basic
Layer Height: 0.16 mm

Printer

Bambu Lab P1S | Texture... | Sync info

Nozzle

Diameter 0.4 | Flow Standard

Project Filaments

Filament

1 PLA Basic

Process Global Objects Advanced

0.16mm High Quality @BBL X1C

Quality | Strength | Speed | Support | Others

Layer height

Layer height	0.16	mm
Initial layer height	0.2	mm
Mixed color sublayer	☐	

Line width

Default	0.42	mm
Initial layer	0.5	mm
Initial layer infill	0.5	mm
Outer wall	0.42	mm
Inner wall	0.45	mm
Top surface	0.42	mm
Sparse infill	0.45	mm
Internal solid infill	0.42	mm
Support	0.42	mm

Seam

Seam position	Aligned
Seam placement away from overhangs(experimental)	☐
Smart scarf seam application	☑
Scarf application angle threshold	155 °
Scarf around entire wall	☐
Scarf steps	10
Scarf joint for inner walls	☑
Override filament scarf seam setting	☐
Role-based wipe speed	☑

Precision

Slice gap closing radius	0.049	mm
Resolution	0.012	mm
Arc fitting	☑	
X-Y hole compensation	0	mm
X-Y contour compensation	0	mm
Auto circle contour-hole compensation	☐	
Elephant foot compensation	0.15	mm
Precise Z height	☐	

Ironing

Ironing Type	No ironing

Wall generator

Wall generator	Classic

Advanced

Order of walls	inner/outer
Print infill first	☐
Bridge flow	1
Thick bridges	☐
Bridge counterbore holes	None
Only one wall on top surfaces	Top surfaces
Only one wall on first layer	☐
Smooth speed discontinuity area	☑
Smooth coefficient	150
Avoid crossing wall	☐

FH330_Controller_Cover

0.16mm High Quality @BBL X1C

Quality | **Strength** | Speed | Support | Others

Walls

Wall loops	2
Alternate extra wall	☐
Embedding the wall into the infill	☐
Detect thin wall	☐

Top/bottom shells

Top surface pattern	Monotonic...
Top surface density	100 %
Top shell layers	6
Top shell thickness	1 mm
Top paint penetration layers	6
Bottom surface pattern	Monotonic
Bottom surface density	100 %
Bottom shell layers	4
Bottom shell thickness	0 mm
Bottom paint penetration layers	4
Internal solid infill pattern	Rectilinear

Sparse infill

Sparse infill density	15 %
Fill multiline	1
Sparse infill pattern	Gyroid
Length of sparse infill anchor	400% mm or %
Maximum length of sparse infill anchor	20 mm or %

Advanced

Infill/Wall overlap	15 %
Infill direction	45 °
Bridge direction	0 °
Minimum sparse infill threshold	15 mm²
Infill combination	☐
Detect narrow internal solid infill	☑
Sub-top surface pattern	Monotonic
Ensure vertical shell thickness	Enabled
Detect floating vertical shells	☑
Sparse infill filament	Default
Solid infill filament	Default
Walls filament	Default

0.16mm High Quality @BBL X1C

Quality | Strength | **Speed** | Support | Others

Initial layer speed

Initial layer	50 mm/s
Initial layer infill	105 mm/s

Other layers speed

Outer wall	60 mm/s
Inner wall	150 mm/s
Small perimeters	50% mm/s or %
Small perimeter threshold	0 mm
Sparse infill	200 mm/s
Internal solid infill	200 mm/s
Vertical shell speed	80% mm/s or %
Top surface	150 mm/s
Slow down for overhangs	☑
Overhang speed	60 mm/s 10%
	30 mm/s 25%
	10 mm/s 50%
	10 mm/s 75%
	10 mm/s 100%
Slow down by height	☐
Bridge	50 mm/s
Gap infill	250 mm/s
Support	150 mm/s
Support interface	80 mm/s

Travel speed

Travel	500 mm/s

Acceleration

Normal printing	4000 mm/s²
Travel	10000 mm/s²
Initial layer travel	6000 mm/s²
Initial layer	500 mm/s²
Outer wall	2000 mm/s²
Inner wall	0 mm/s²
Top surface	2000 mm/s²
Sparse infill	100% mm/s² or %

FH330_Controller_Cover

0.16mm High Quality @BBL X1C

Quality | Strength | Speed | **Support** | Others

Support

Enable support	☐
Type	tree(auto)
Style	Default
Threshold angle	25 °
On build plate only	☐
Remove small overhangs	☑

Raft

Raft layers	0 layers

Filament for Supports

Support/raft base	Default
Support/raft interface	Default

Advanced

Initial layer density	90 %
Initial layer expansion	-1 mm
Support wall loops	-1
Top Z distance	0.16 mm
Bottom Z distance	0.16 mm
Base pattern	Default
Base pattern spacing	2.5 mm
Pattern angle	0 °
Top interface layers	2 layers
Bottom interface layers	2 layers
Interface pattern	Default
Top interface spacing	0.5 mm
Normal Support expansion	0 mm
Support/object xy distance	0.35 mm
Z overrides X/Y	☐
Support/object first layer gap	0.2 mm
Don't support bridges	☐
Independent support layer height	☑

0.16mm High Quality @BBL X1C

Quality | Strength | Speed | Support | **Others**

Bed adhesion

Skirt loops	0
Skirt height	1 layers
Brim type	Auto
Brim width	5 mm
Brim-object gap	0.1 mm

Prime tower

Enable	☑
Skip points	☑
Internal ribs	☐
Width	35 mm
Max speed	90 mm/s
Brim width	3 mm
Infill gap	150 %
Rib wall	☑
Extra rib length	0 mm
Rib width	8 mm
Fillet wall	☑
Flat ironing	☐
Line ironing	☑
Ironing speed	10 mm/s
Side scrape after tool change	☐

Purge options

Purge into objects' infill	☐
Purge into objects' support	☑

Special mode

Slicing Mode	Regular
Print sequence	By layer
Spiral vase	☐
Timelapse	Instant
Fuzzy Skin	None(allow ...
Fuzzy skin generator mode	Displacement
Fuzzy skin noise type	Classic
Fuzzy skin point distance	0.8 mm
Fuzzy skin thickness	0.3 mm
Apply fuzzy skin to first layer	☐